Paulmann

Safety Instructions

1, 2, 3, 4, 5, 6, 10, 11, 13, 14, 19, 22, 23, 24, 25, 26, 33, 34

Info

www.paulmann.com

Paulmann Licht GmbH
Quezinger Feld 2
31832 Springe
Germany

www.paulmann.com

Art.-Nr.: **798.35**
798.37

(+MA 326) PXY 07/19

CE

798.35/798.37

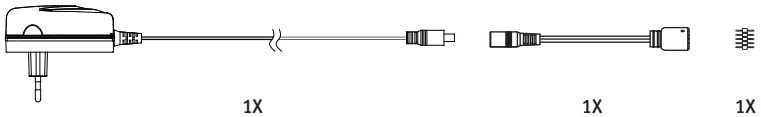

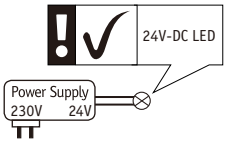

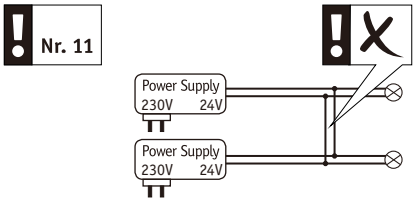

Power Supply 12W	Power Supply 36W
Art.-Nr.: **798.35**	Art.-Nr.: **798.37**

A MaxLED500/MaxLED1000

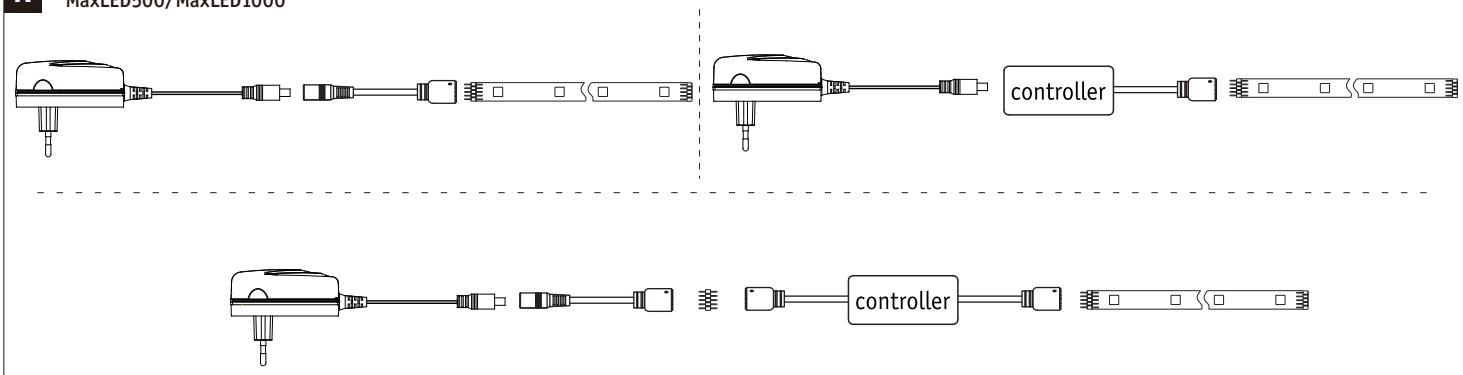

B MaxLED Tunable White/RGB/RGBW

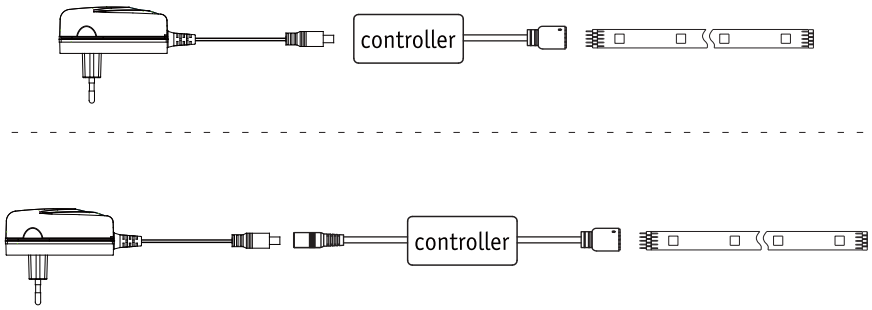
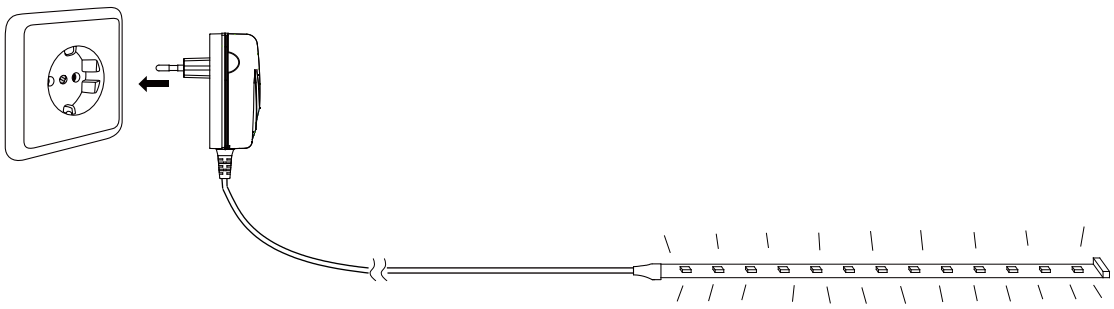
C